Tutorial 1 – Creating a minimal surface

In this tutorial you will learn how to create a **minimal surface within fixed boundaries**. As an example we will start with the well-known **Scherk's surface**.

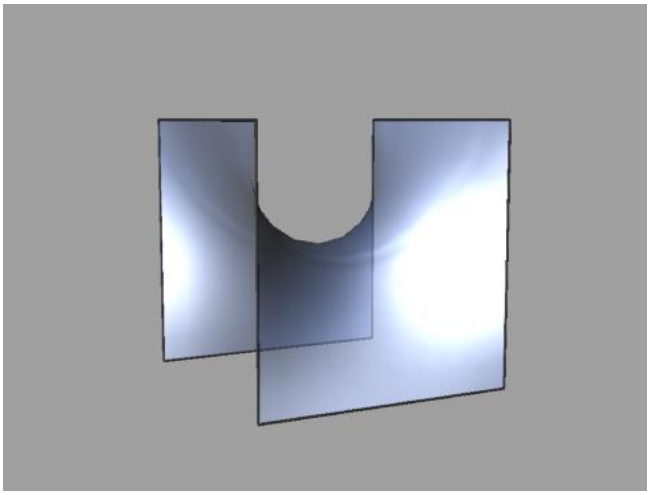

1 At first, we have to generate a NURBS surface, which serves as initial geometry for the form finding iteration. The boundaries of the initial surface have to be identical with the ones from the intended Scherk's surface, as they are fixed throughout the iteration. The interior of the surface can be shaped arbitrarily – in order to facilitate convergence, it is yet advantageous to shape it as close as possible to the final surface.
For the initial geometry generate three adjacent rectangles (e.g. with the **SrfPt** command) and **Join** them together so that they will form one entity.

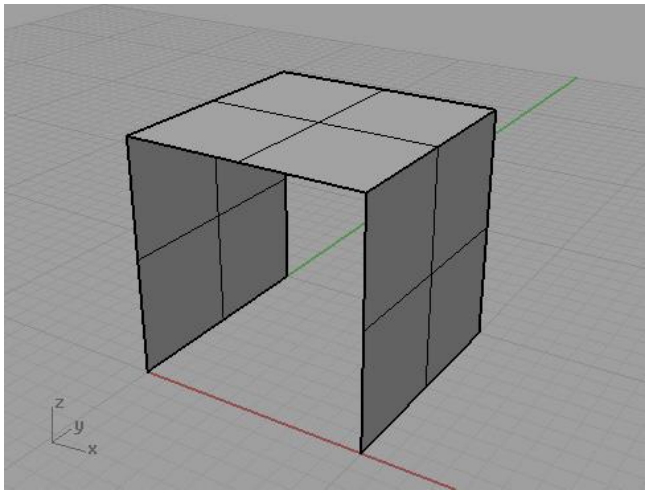

2 Now you have to convert the NURBS patch into a polygon **Mesh**. As only linear/bilinear interpolation is used for meshes, pay attention to discretize your geometry with sufficient elements. If you are using too coarse mesh, the solution will not be accurate, if you are using way too many elements, your computer may be running out of memory.

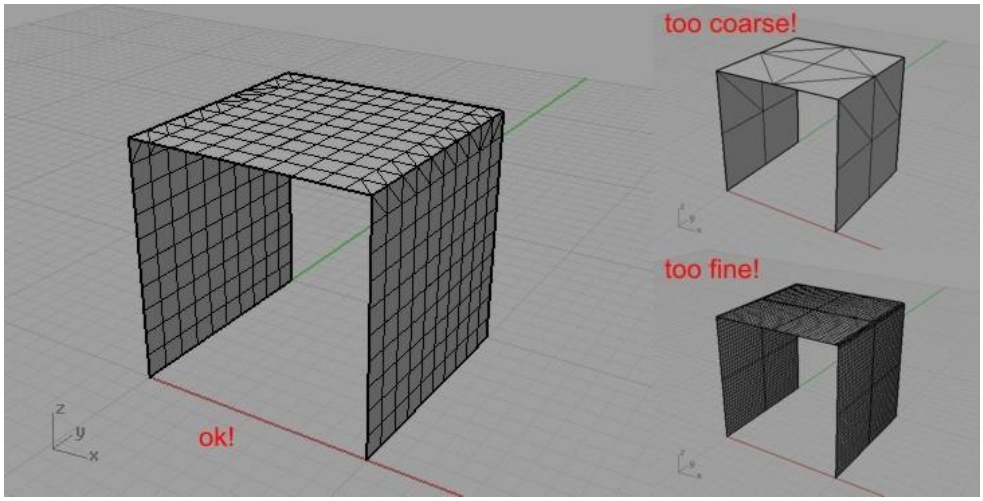

3 In order to avoid gaps in the mesh, we have to weld all vertices together. This is necessary, because Rhino generates individual vertices for each individual surface – even if joined together. To do so, enter **WeldVertices** and select all vertices of our mesh.

4 In the next step, we have to assign the problem parameters. We start by assigning a prestress distribution to the mesh: As we want to generate a minimal surface, the pretension in warp and weft direction *must* be equal (soap film analogy).

Set the mesh properties by clicking on  or entering the command **fnMeshProps**. Select the mesh and enter in the popup window the pre-tension for warp and weft (e.g. set both to the value of 5).

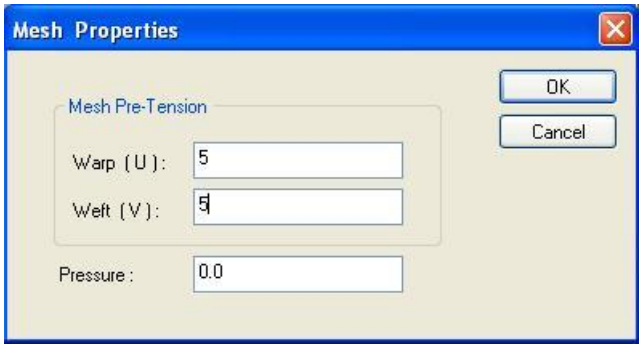

5 The boundaries for Scherck's surface are fixed. We could consequently restrain each node at the boundary ( or **fnMeshNodeProps**), but it can be easier done by creating a fixed boundary mesh. Click on  (**fnBoundMesh**), select the mesh and choose the option **Beam (fixed).**

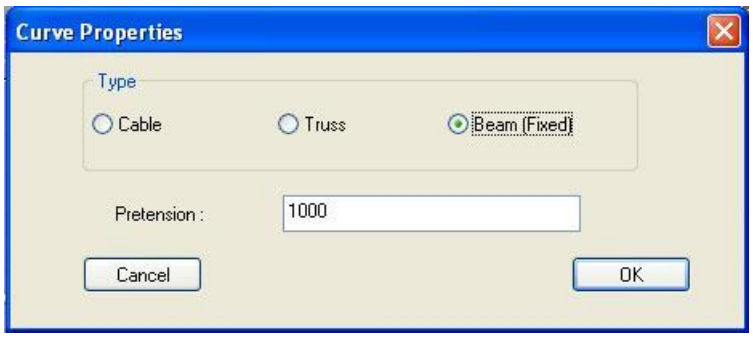

This will generate a polyline, whose vertices are all fixed.

6 Next, we have to set the number of form finding steps we want to perform: Click on  or enter **fnOptions**: Since we are starting from a very rough approximation of our final geometry, we have

to perform a slightly higher number of form finding steps. Therefore, set the maximum number of form finding steps to 20. If your approximation of the final surface is better, fewer steps will be enough.

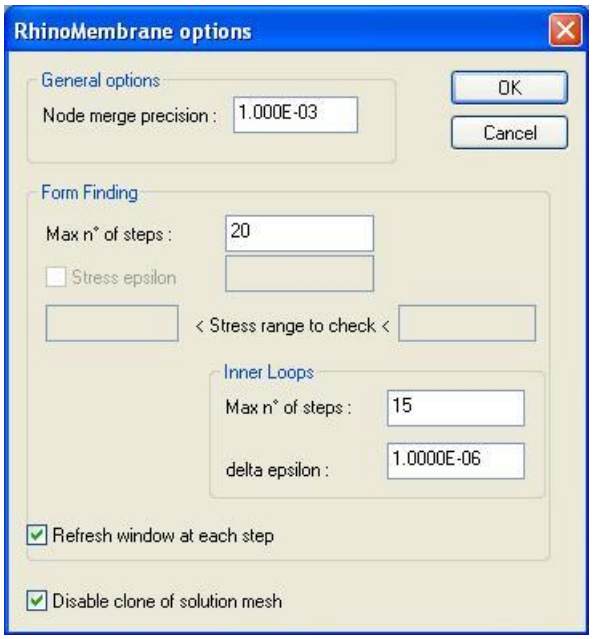

7 To start the form finding procedure, click on  (**fnFormFind**). You can see how the structure converges to the final minimal surface. At the end of the form finding procedure, a new mesh object will created on the active layer. The geometry of this surface represents the equilibrium geometry for the prescribed pre-tension (in our case Scherk's minimal surface).

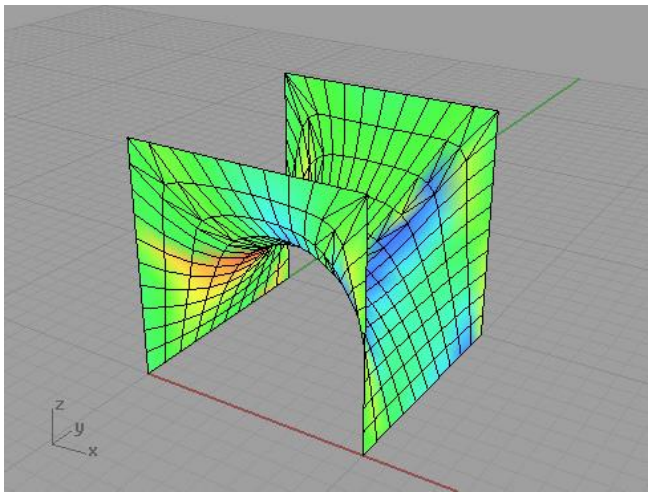

Tutorial 2 – Membrane structure with edge cables

In this example, we will create a classic four point sail: The boundary of the prestressed membrane is supported by four edge cables, which meet at four fixed corner points.

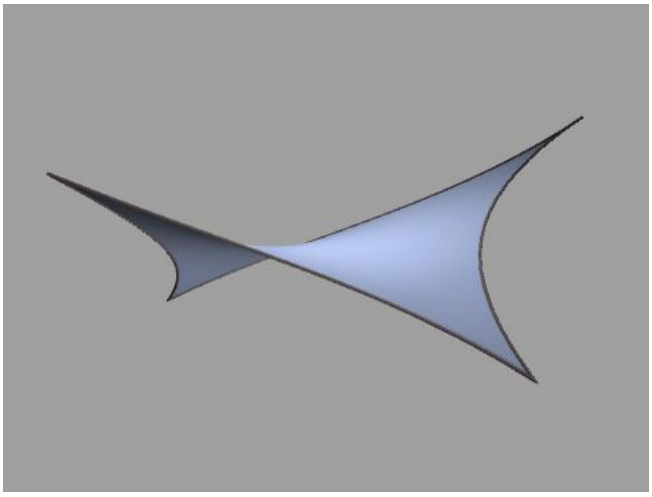

1 As in Tutorial 1, create an initial geometry for your four point sail using NURBS. The four corner points have to have their final position, as they will stay fixed throughout the form finding.

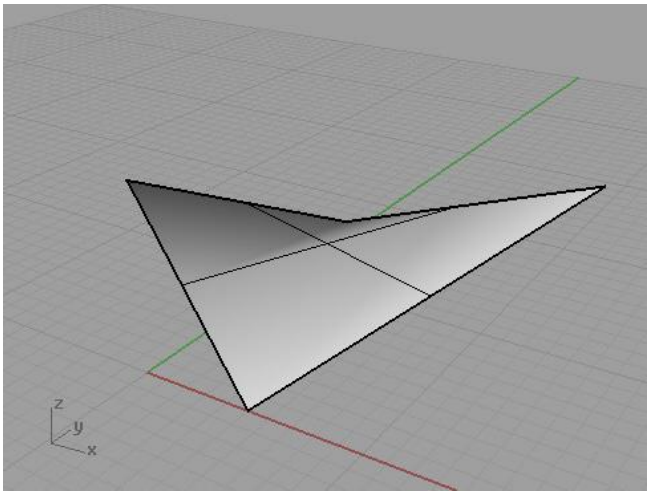

2 Convert the NURBS patch to a **Mesh** object.

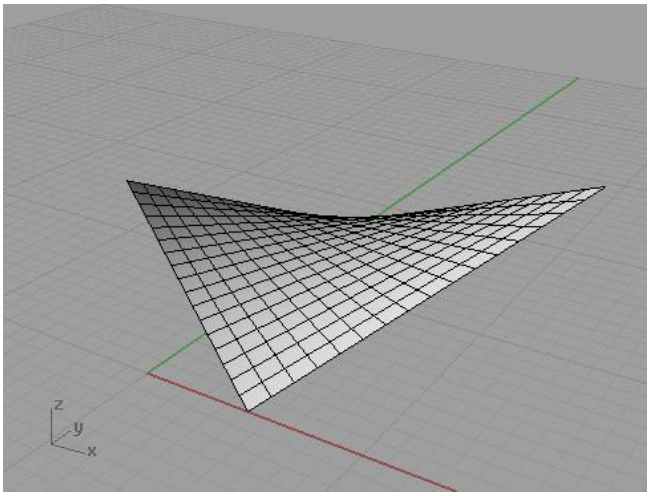

3 Next, assign the parameters for our form finding problem. Let's start with the boundary conditions:

Fix all three spatial degrees of freedom of the four corner nodes (or **fnMeshNodeProps**):

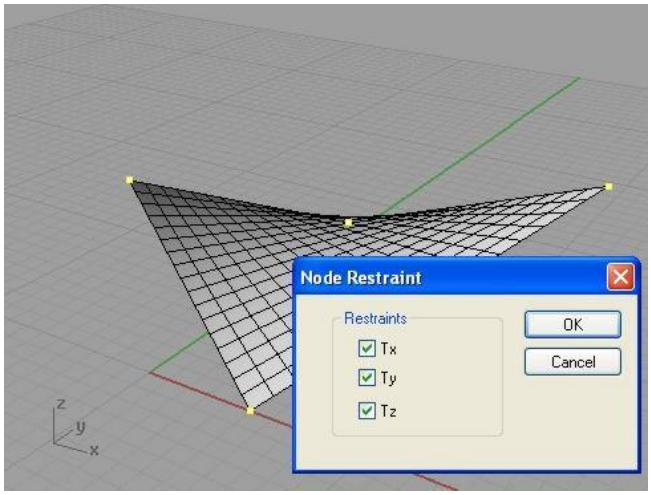

4 Set the pre-tension for the membrane (or **fnMeshProps**). Choose an isotropic prestress distribution of 1 in both warp and weft direction.

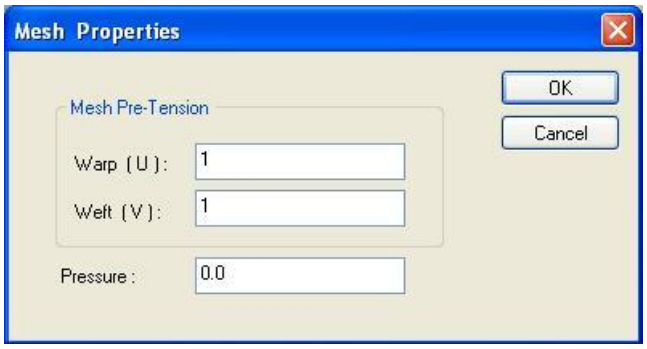

5 Now we will create the edge cables: We could do this step by step by assigning a pre-tension (or **fnEdgeProps**) to each individual mesh edge. But as this is a pretty time consuming task, it is easier to create a *cable boundary mesh* using or **fnBoundMesh**. The necessary pre-tension in the edge cables can be determined by the pre-tension in the membrane multiplied with the desired radius of the edge cables (Boiler formula). Let's assume we want to have a radius R = 15. Consequently, the pre-tension of the edge cables has the values 15 · 1 = 15.

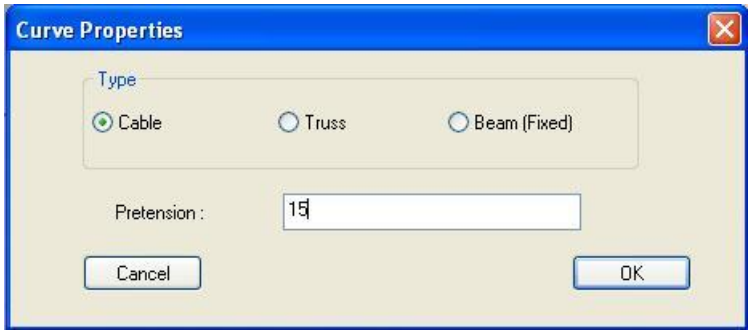

6 As our initial geometry is a rather good approximation of the final membrane surface, it is enough to execute 5 form finding steps (you can try a higher number, but there will be only minor changes). Set the maximum number of form finding steps using or **fnOptions**.

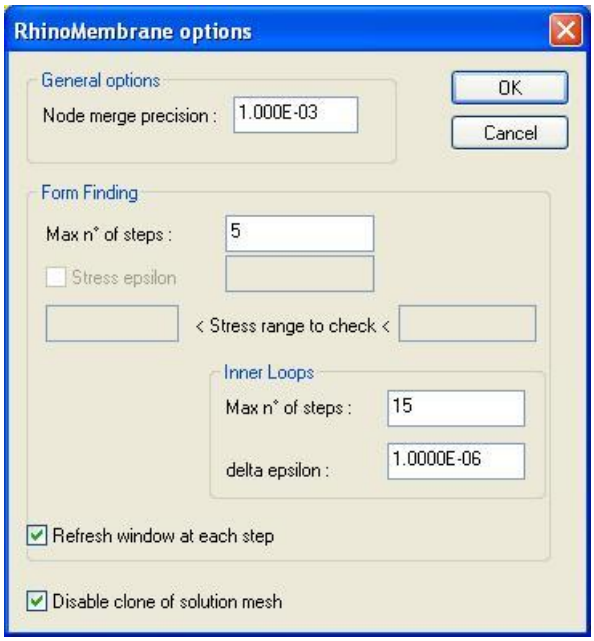

7 Start the form finding procedure ( or **fnFormFind**). At the end of the calculation, a new mesh object with the final shape of the four point sail is created on the active layer. It is the equilibrium shape for the prescribed membrane and edge cable pre-tension.

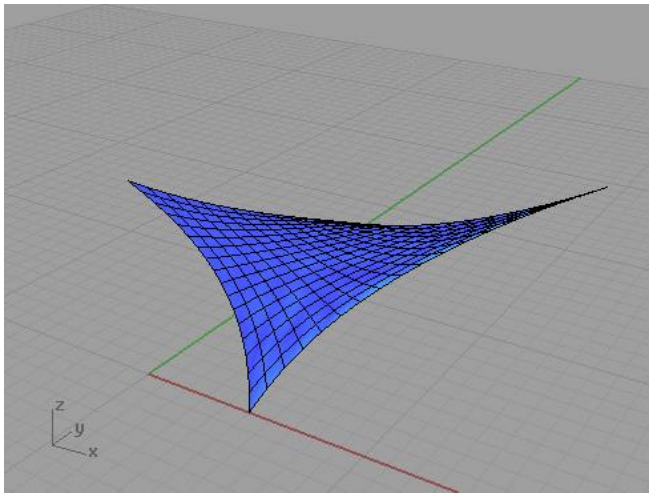

8 Of course, the pre-tension in warp and weft direction doesn't have to be equal – the membrane can be prestressed anisotropically. The definition of the fiber directions is done via the texture mapping in Rhino. To visualize the warp direction, apply a texture with horizontal lines to the initial mesh and switch to render mode. The lines on the mesh will be the warp direction for the calculation (weft is orthogonal to warp).

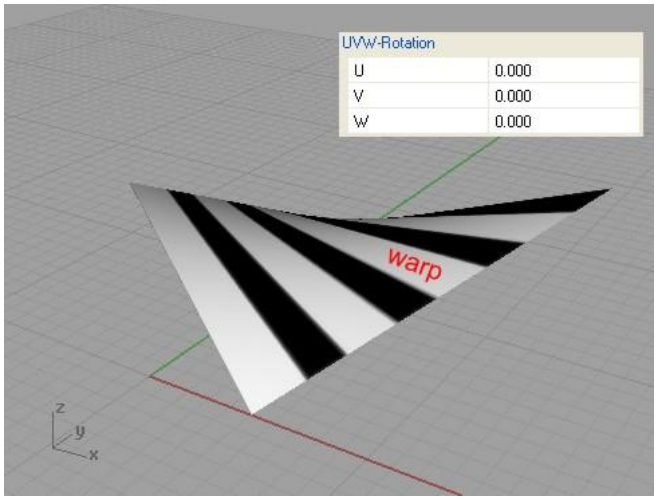

9 By adjusting the texture mapping (use the w angle in UVW rotation), you can modify the warp direction.

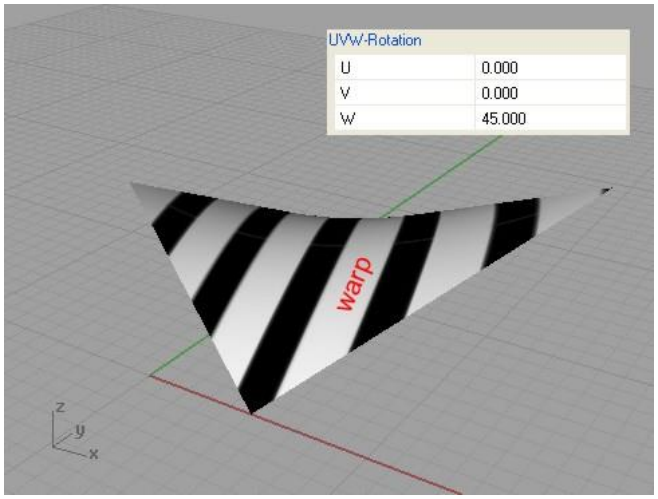

10 As there is no exact theoretical equilibrium shape for an anisotropically prestressed membrane, the form finding algorithm cannot find one either (what doesn't exist, can't be found): As a consequence, the mesh will deform with the number of form finding steps. Yet as all intermediate solutions are stable equilibrium shapes for a prestress distribution close to the target state (not exact the target state, but getting closer with every iteration), we advise you to do only a short number of form finding steps (1-5), until you've reached a good agreement of form and prestress (see the help section for a further discussion of the problem).

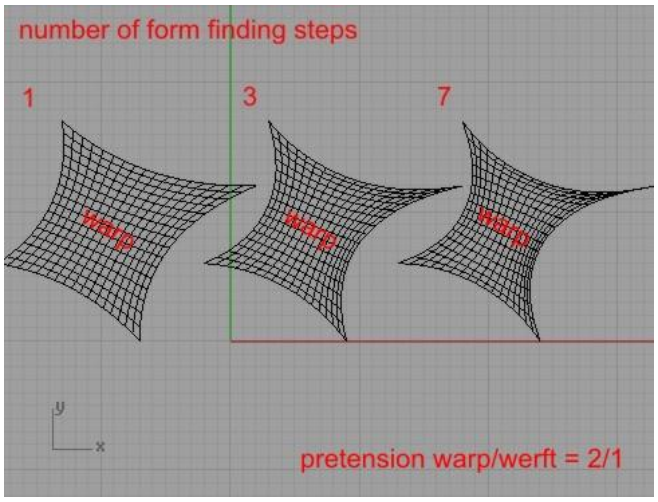

Tutorial 3 – Pneumatic structure

In the third tutorial, we will do the form finding of a pneumatic structure. Here, we prescribe not only the pre-tension of the membrane, but the pressure acting on the membrane as well. By these means, we can generate air-supported cushions.

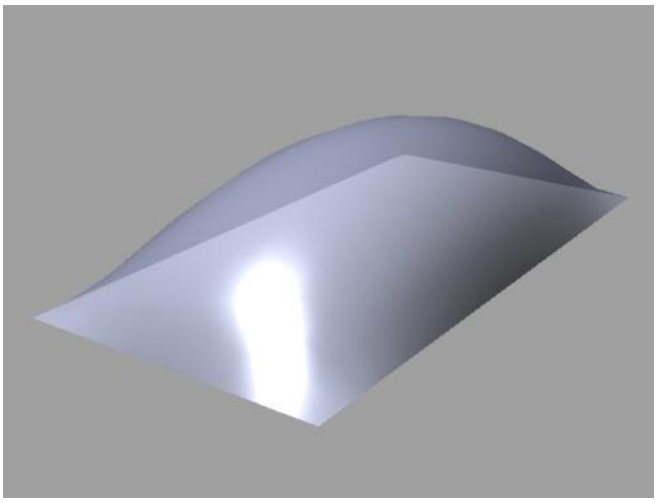

1 We start by creating a NURBS patch serving as initial geometry for form finding. Let's generate a rectangular pneumatic structure measuring e.g. 2 by 4.

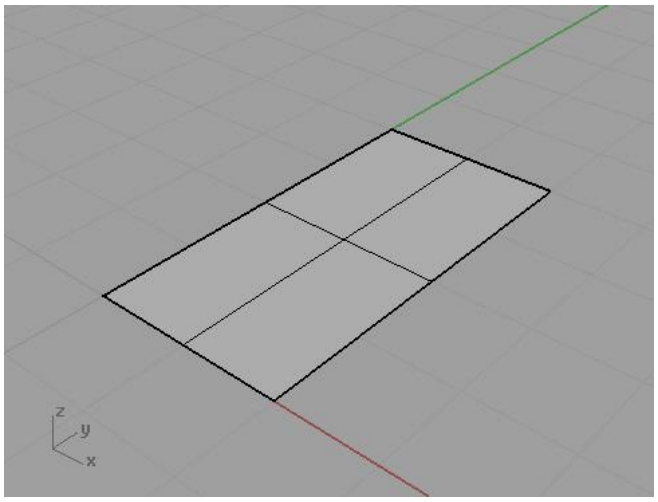

2 Convert the NURBS patch into a **Mesh**.

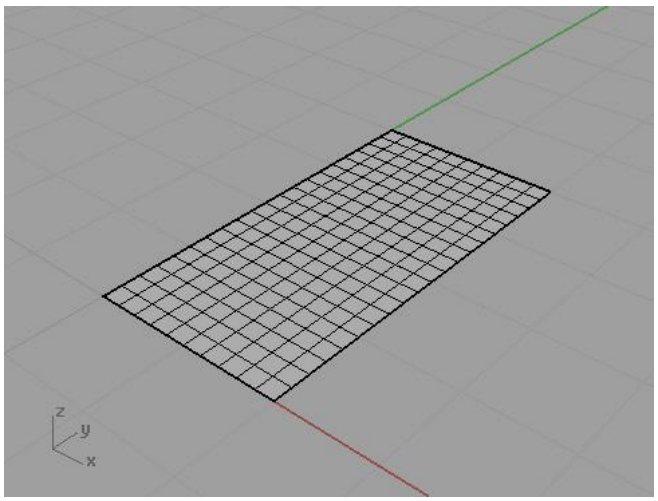

3 The cushion shall be fixed at the boundary. So we create a boundary mesh ( or **fnBoundMesh**) of fixed beams.

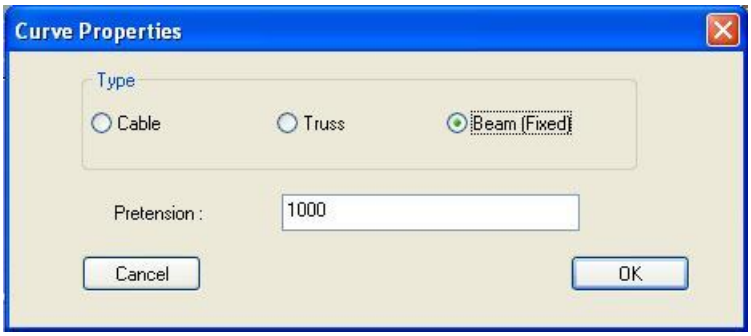

4 Now we can assign the properties to the membrane ( or **fnMeshProps**). We set the pre-tension in both warp and weft direction to 0.4. The pressure is set to 0.5. Please pay attention to the different units of the respective entities: Membrane pre-tension has the unit [force/length], pressure the unit [force/(length·length)]. Similar to edge cables, pressure and pre-tension in the membrane are linked via Boiler formula.

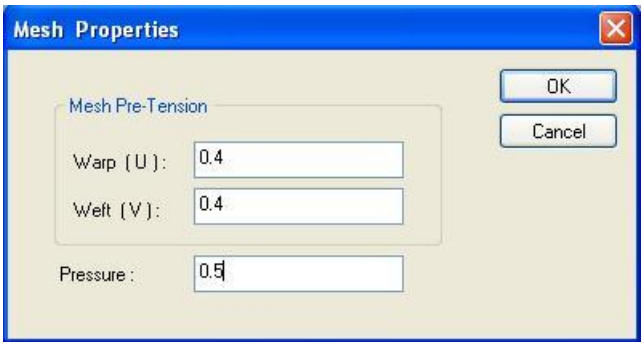

5 Set the number of form finding steps in options menu ( or **fnOptions**). For this simple example, 5 steps should do the trick.

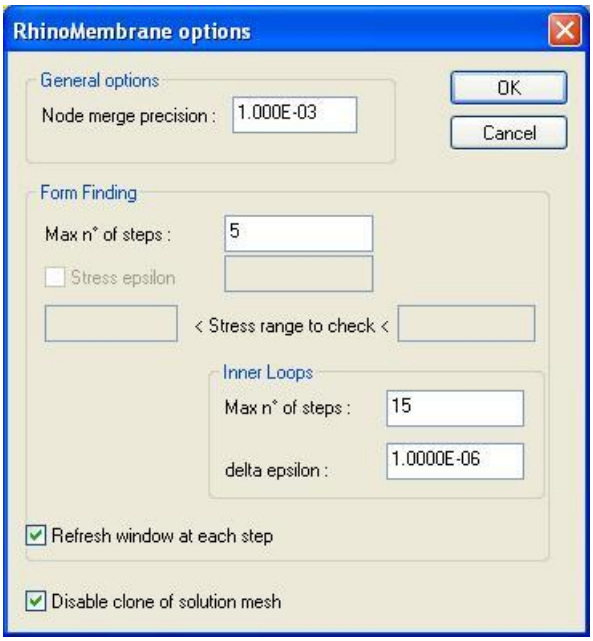

6 Start the form finding procedure ( or **fnFormFind**). At the end of the calculation, a new mesh object with the final shape of the pneumatic cushion is created on the active layer. It represents the equilibrium shape for the prescribed membrane pre-tension and pressure distribution.

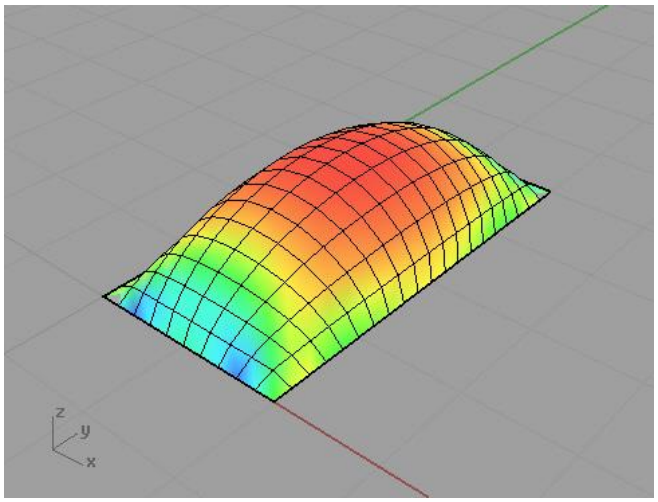

7 We advise you to play around with the pressure value a bit: If you decrease the pressure while keeping the membrane prestress constant, the structure will be flatter. If you increase the pressure, the structure will be more curved. But pay attention: If the pressure exceeds a certain limit value (depending on the geometry and membrane-pretension), no solution for the equilibrium shape exists any more and consequently the form finding procedure will stop without result.

